ZEFIRO3

Gruppo estetico / Aesthetic group / Aesthetische Gruppe / Groupe esthétique / Grupo estético

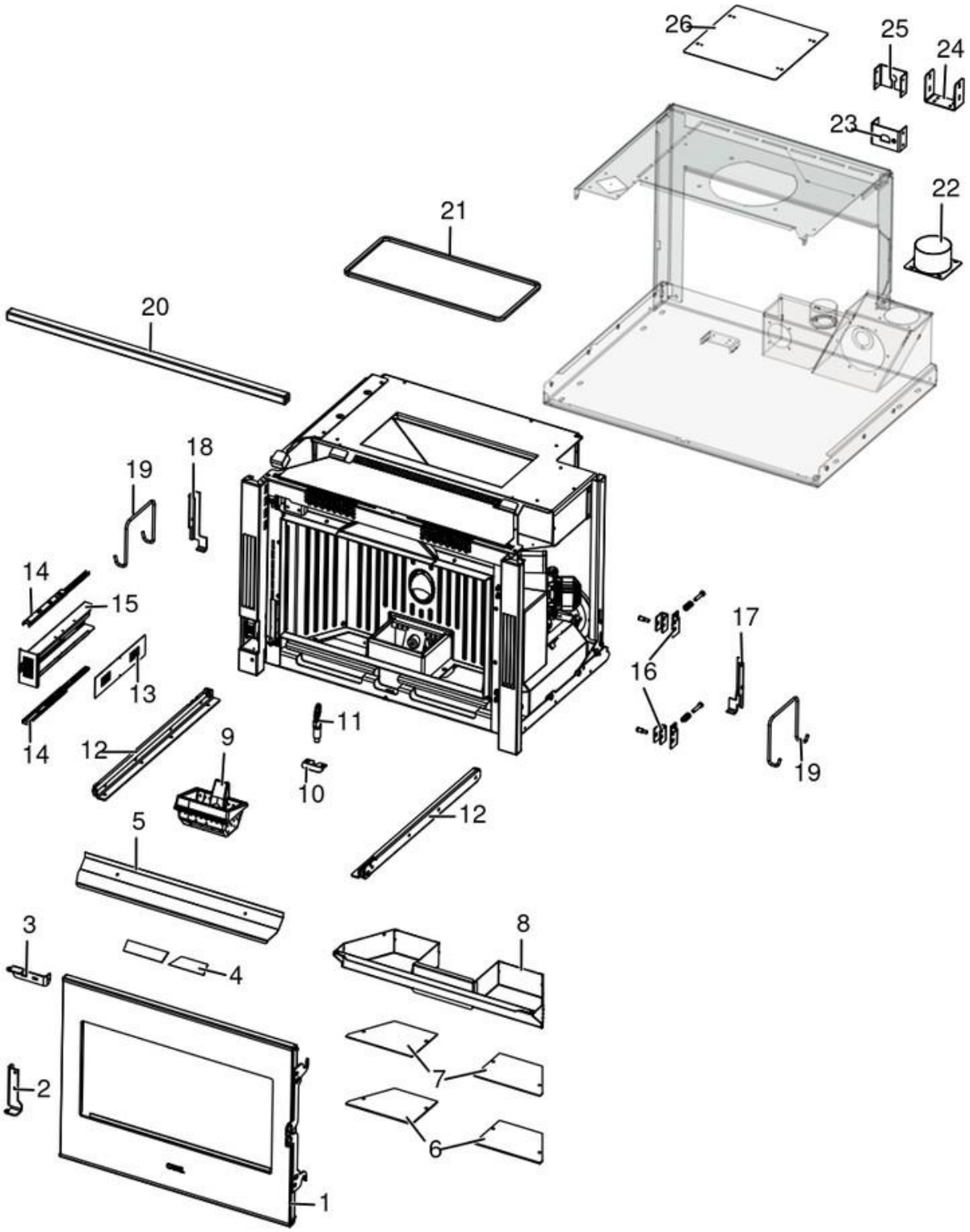

All rights reserved MCZ GROUP S.p.A.

N°	Codice/Code	Descrizioni / Description / Beschreibung / Description / Descripcion
1	4D245GP18017	Porta / Door / Tür / Porte / Puerta
2	4D24018397361	Cerniera inferiore / Lower hinge / Unteres Scharnier / Charnière inférieure / Bisagra inferior
3	4D24018396361	Cerniera superiore / Upper hinge / Oberes Scharnier / Charnière supérieure / Bisagra superior
4	4D18013039A	Guarnizione a nastro (5 m) / Door strip gasket (5 m) / Türbanddichtung (5 m) / Joint vitre 25x3N5M / Guarnición cinta puerta (5m)
4	4D18013039B	Guarnizione a nastro (50 m) / Door strip gasket (50 m) / Türbanddichtung (50 m) / Joint vitre 25x3N50M / Guarnición cinta puerta (50m)
5	4D242183063	Staffa / Bracket / Haltebügel / Etrier / Abrazadera
6	4D180184080	Guarnizione tappo fumi / Smoke plug gasket / Rauchgasklappe- Dichtung / Joint clapet fumées / Junta tapón humos
7	4D241183531	Tappo fumi DX / Smoke plug / Rauchgasklappe / Clapet fumées / Tapón humos
8	4D24018342461	Cassetto cenere / Ash drawer / Aschenkasten / Tiroir à cendres / Cajón ceniza
9	4D13016602061	Braciere / Grate / Brennschale / Brasero / Brasero
10	4D242183043	Scivolo / Ramp / Rutsche / Glissèrie / Tobogán
11	4D120183020	Pistoncino a molla / Spring piston / Federkolben / Piston à ressort / Pistón de resorte
12	4D180184010	Assieme guida dx/sx / Guides RH/LH / Schiene Rechts/Links / Glissière droite et gauche / Corredera DCA/IZDA
13	4D241183121	Tappo inferiore / Display cover / Bedienblende- Abdeckung / Couvercle du panneau de commandes / Tapón Display
14	4D180184020	Assieme guida 250 mm / Guide 250 mm / Schiene 250 mm / Glissière 250 mm / Corredera 250 mm
15	4D24018350463	Porta display / Display holder / Display Träger / Porte-display / Porta Dispaly
16	4D24015841361	Kit decompressione camera di combustione / Pressure relief kit / Bausatz Überdruckablauf Brennkammer / Kit decompression chambre de combustion / Kit decompressión cámara de combustión
17	4D24018394363	Fermo per sicurezza DX / RH Safety stop / Sicherheitsschloss Rechts / Loquet de securité droite / Cierre de segurdad DCHO
18	4D24018395363	Fermo per sicurezza SX / LH Safety stop / Sicherheitsschloss Links / Loquet de securité gauche / Cierre de segurdad IZDO
19	4D12013145	Maniglia manutenzione / Maintenance handle / Wartungsgriff / Poignée pour l'entretien / Tirador por mantenimiento
20	4D24018363363	Profilo superiore cornice / Frame upper profile / Oberes Profil des Ramens / Profil supérieur du cadre / Perfil superior
21	4D180185020	Guarnizione 383X167 / Gasket 383X167 / Dichtung 383X167 / Joint 383X167 / Junta 383X167
22	4D14513040	Raccordo D.80 mm / Connector D.80 mm / Anschlußrohr D.80 mm / Raccord D.80 mm / Racor D.80 mm
23	4D241183493	Supporto presa / Outlet support / Halterung Steckdose / Support prise / Soporte toma
24	4D241183483	Supporto presa / Outlet support / Halterung Steckdose / Support prise / Soporte toma
25	4D241183473	Blocca cavo / Cable stop / Kabelstopper / Stop pour cable / Tope por cable
26	4D241183171	Tappo coperchio serbatoio pellet / Pellet hopper cover / Deckel Pelletbehälter / Couvercle réservoir pellet / Tapadera depósito pellet

All rights reserved MCZ GROUP S.p.A.

ZEFIRO3

Porta fuoco / Fire door / Feuertür / Porte foyer / Puerta hogar

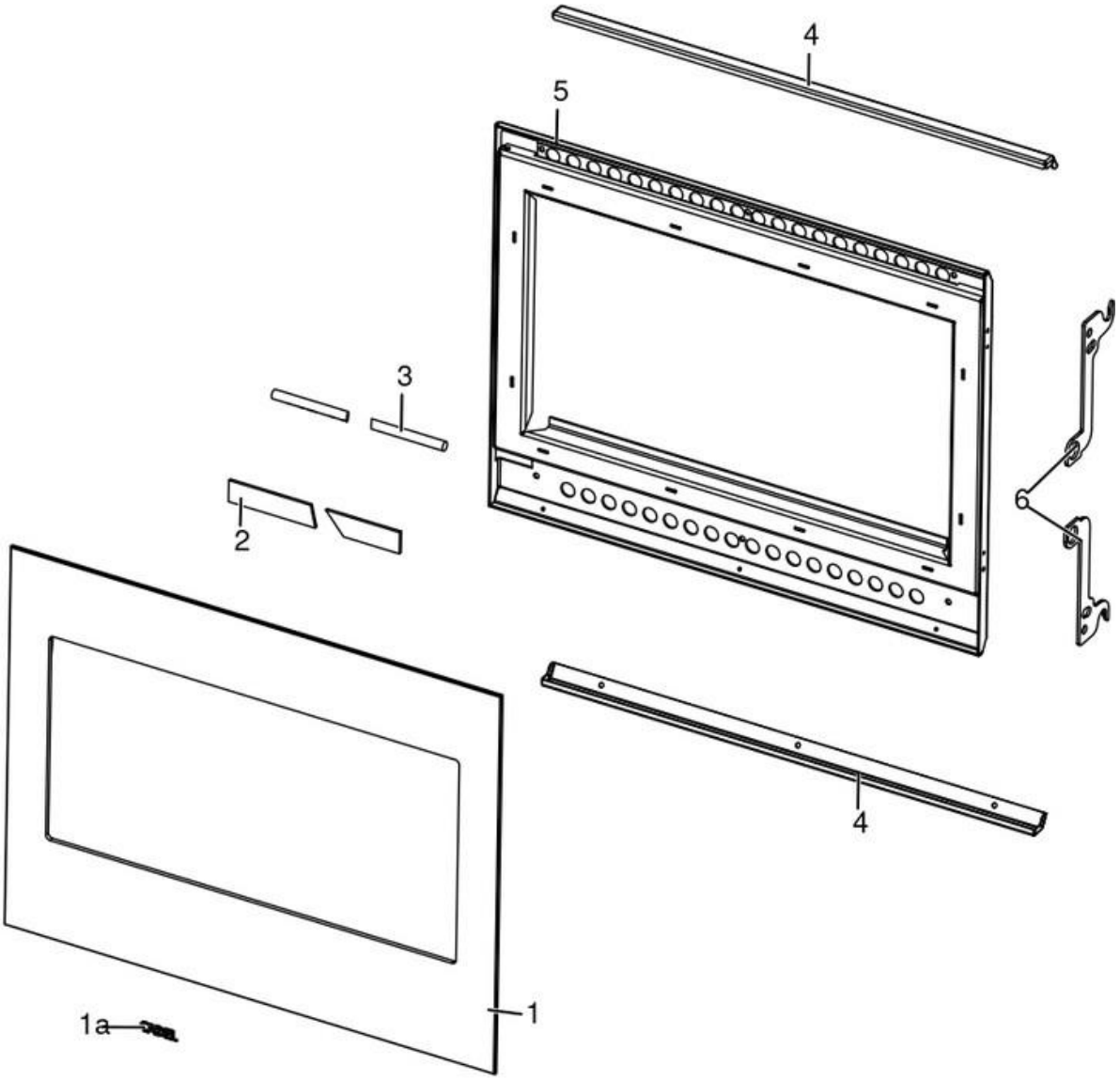

All rights reserved MCZ GROUP S.p.A.

N°	Codice/Code	Descrizioni / Description / Beschreibung / Description / Descripcion
1	4D170183010	Vetro ceramico serigrafato / Ceramic glass / Glaskeramikscheibe / Vitre en céramique sérigraphié / Cristal cerámico
1a	4D12013039	Logo Cadel / Cadel logo / Cadel Logo / Cadel logo / Cadel logo
2	4D18013039A	Guarnizione a nastro (5 m) / Door strip gasket (5 m) / Türbanddichtung (5 m) / Joint vitre 25x3N5M / Guarnición cinta puerta (5m)
2	4D18013039B	Guarnizione a nastro (50 m) / Door strip gasket (50 m) / Türbanddichtung (50 m) / Joint vitre 25x3N50M / Guarnición cinta puerta (50m)
3	4D180171010A	Treccia / Plait / Geflecht / Tresse / Trenza
4	4D24018367361	Fermavetro / Glazing bead / Glashalteleiste / Arrêt-vitres / Junquillos de cristal
5	4D24018319461	Porta / Door / Tür / Porte / Puerta
6	4D24018391161	Gancio chiusura porta / Door closing hook / Haken Türschlissung / Crochet fermeture porte / Gancho cierre porta

All rights reserved MCZ GROUP S.p.A.

ZEFIRO3

Gruppo camera di combustione / Combustion chamber group / Verbrennungskammer Gruppe / Group de chambre de combustion / Grupo cámara de combustión

All rights reserved MCZ GROUP S.p.A.

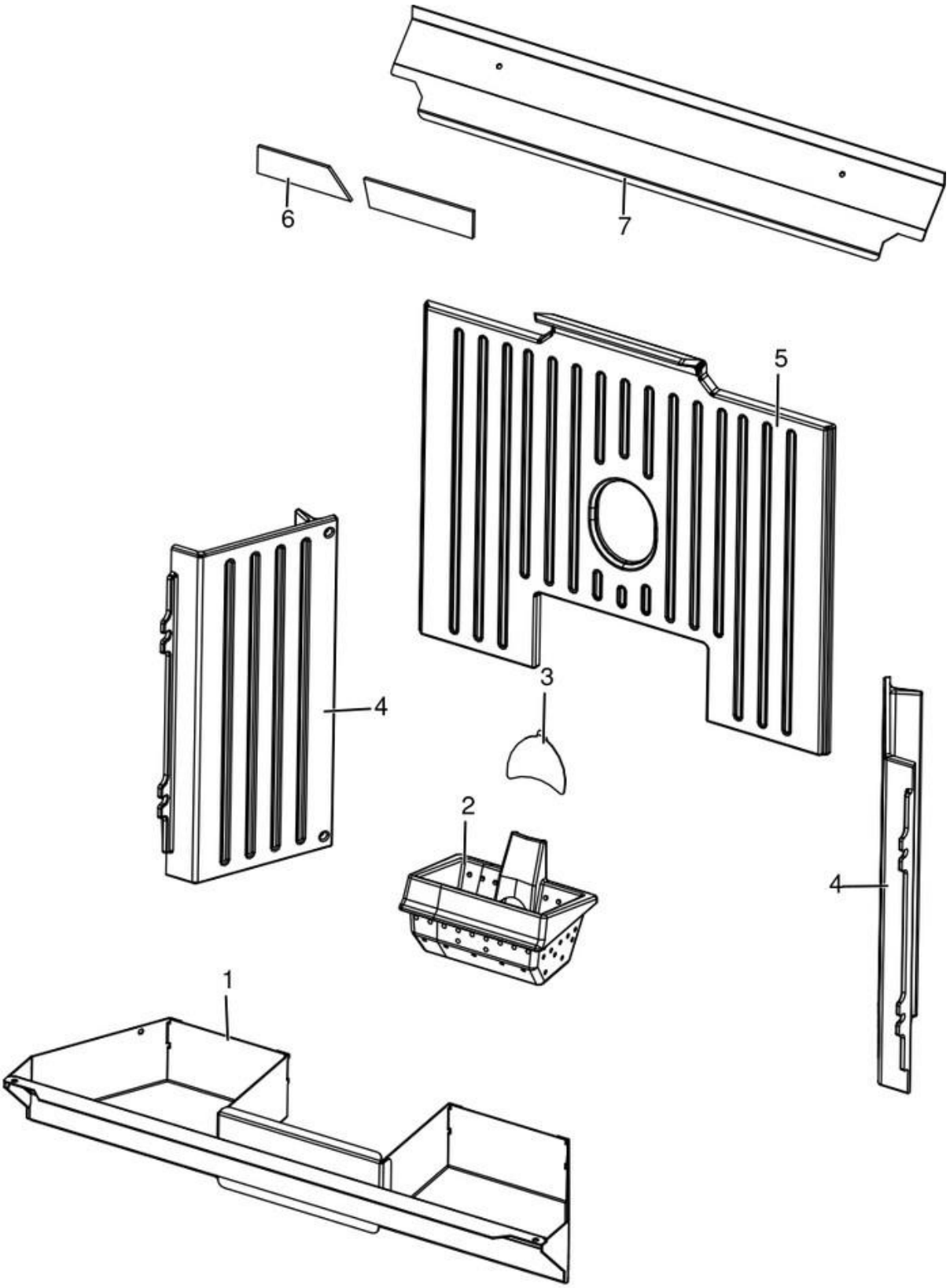

All rights reserved MCZ GROUP S.p.A.

N°	Codice/Code	Descrizioni / Description / Beschreibung / Description / Descripcion
1	4D24018342461	Cassetto cenere / Ash drawer / Aschenkasten / Tiroir à cendres / Cajón ceniza
2	4D13016602061	Braciere / Grate / Brennschale / Brasero / Brasero
3	4D2401303101	Deflettore pellet / Pellet deflector / Pellet Leitblech / Deflecteur pellet / Deflector pellet
4	4D13018301061	Ghisa giro fumi / Smoke cast iron / Rauchsgusseisen / Fonte des fumées / hierro fundido de humos
5	4D13018302061	Tavella in ghisa posteriore / Back cast iron panel / Gusseisenpaneel hinten / Panneau postérieur en fonte / Mesa trasera de hierro fundido
6	4D18013039A	Guarnizione a nastro (5 m) / Door strip gasket (5 m) / Türbanddichtung (5 m) / Joint vitre 25x3N5M / Guarnición cinta puerta (5m)
6	4D18013039B	Guarnizione a nastro (50 m) / Door strip gasket (50 m) / Türbanddichtung (50 m) / Joint vitre 25x3N50M / Guarnición cinta puerta (50m)
7	4D242183063	Staffa / Bracket / Haltebügel / Etrier / Abrazadera

All rights reserved MCZ GROUP S.p.A.

ZEFIRO3

Gruppo caricamento pellet / Pellet feed group / Pellet Fördergruppe / Groupe chargement du pellet / Grupo de carga pellet

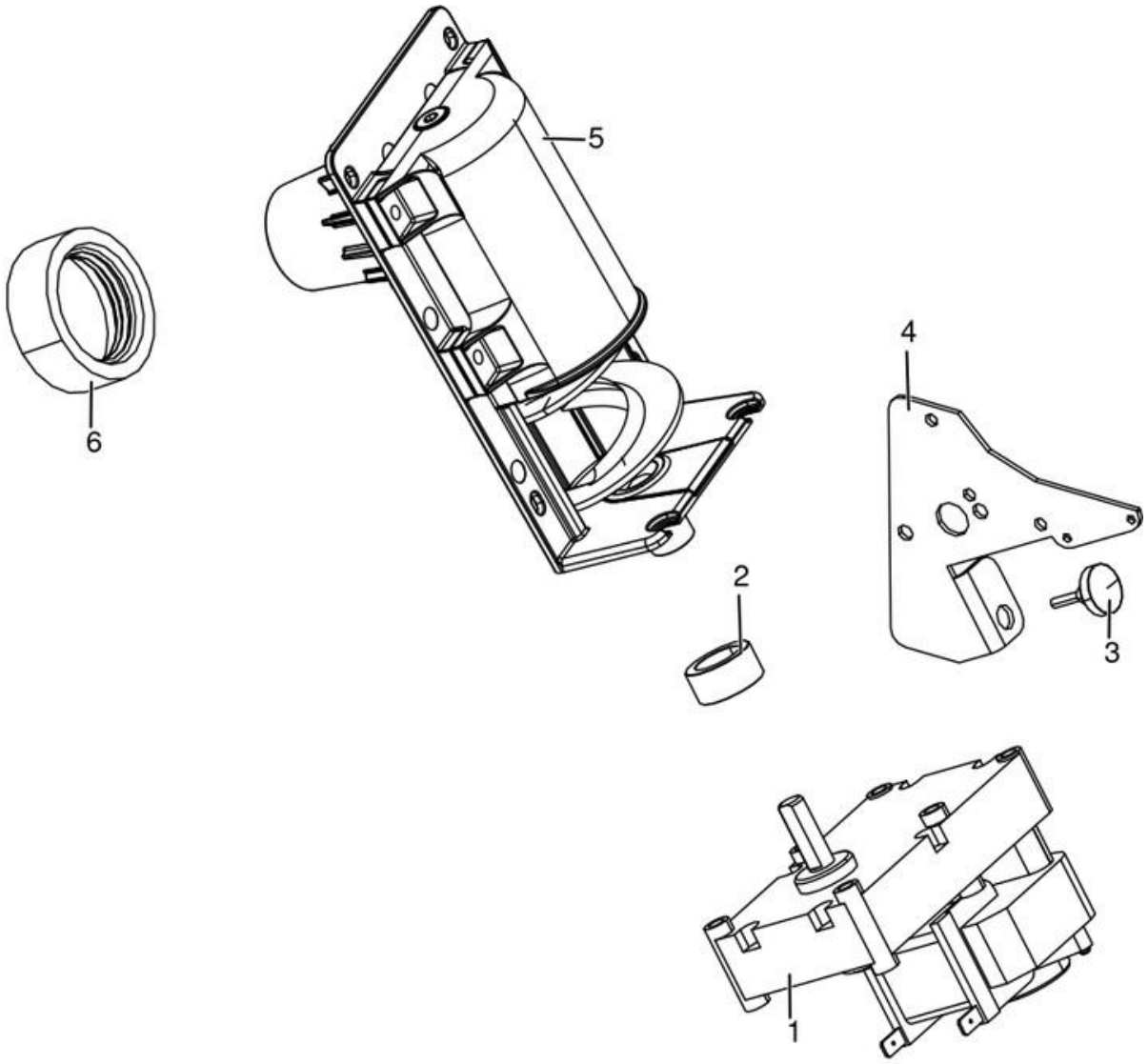

All rights reserved MCZ GROUP S.p.A.

N°	Codice/Code	Descrizioni / Description / Beschreibung / Description / Descripcion
1	4160278	Motoriduttore 1,5 RPM / Reduction motor 1,5 RPM / Getriebemotor 1,5 RPM / Motoréducteur 1,5 TPM / Motorreductor 1,5 RPM
2	4D120183040	Anello Ø 17,2 / Ring Ø 17,2 / Bague Ø 17,2 / Ring Ø 17,2 / Anillo Ø 17,2
3	4D120172010K	Kit 4 paracolpi / Kit 4 Bumpers / Kit 4 Schlagschutzgummi / Kit 4 pièces antichoc / Kit 4 anti-golpes
4	4D241183761	Staffa / Bracket / Bügel / Etrier / Abrazadera
5	4D180177070	Coclea di caricamento pellet / Pellet feed screw / Pelletsförderschnecke / Vis sans fin pour chargement du pellet / Cóclea de carga pellet
6	4D18013003	Guarnizione D.50 mm / Gasket D.50 mm / Dichtung D.50 mm / Joint D.50 mm / Junta D.50 mm

All rights reserved MCZ GROUP S.p.A.

ZEFIRO3

Gruppo elettrico ed elettronico fino al SN 2006226050001 escluso / Electrical and electronic group up to SN 2006226050001 excluded / Elektrische und elektronische Gruppe bis zur SN 2006226050001 ausgeschlossen / Group électrique et électronique jusqu'au NS 2006226050001 exclue / Grupo eléctrico y electrónico hasta NS 2006226050001 excluso

All rights reserved MCZ GROUP S.p.A.

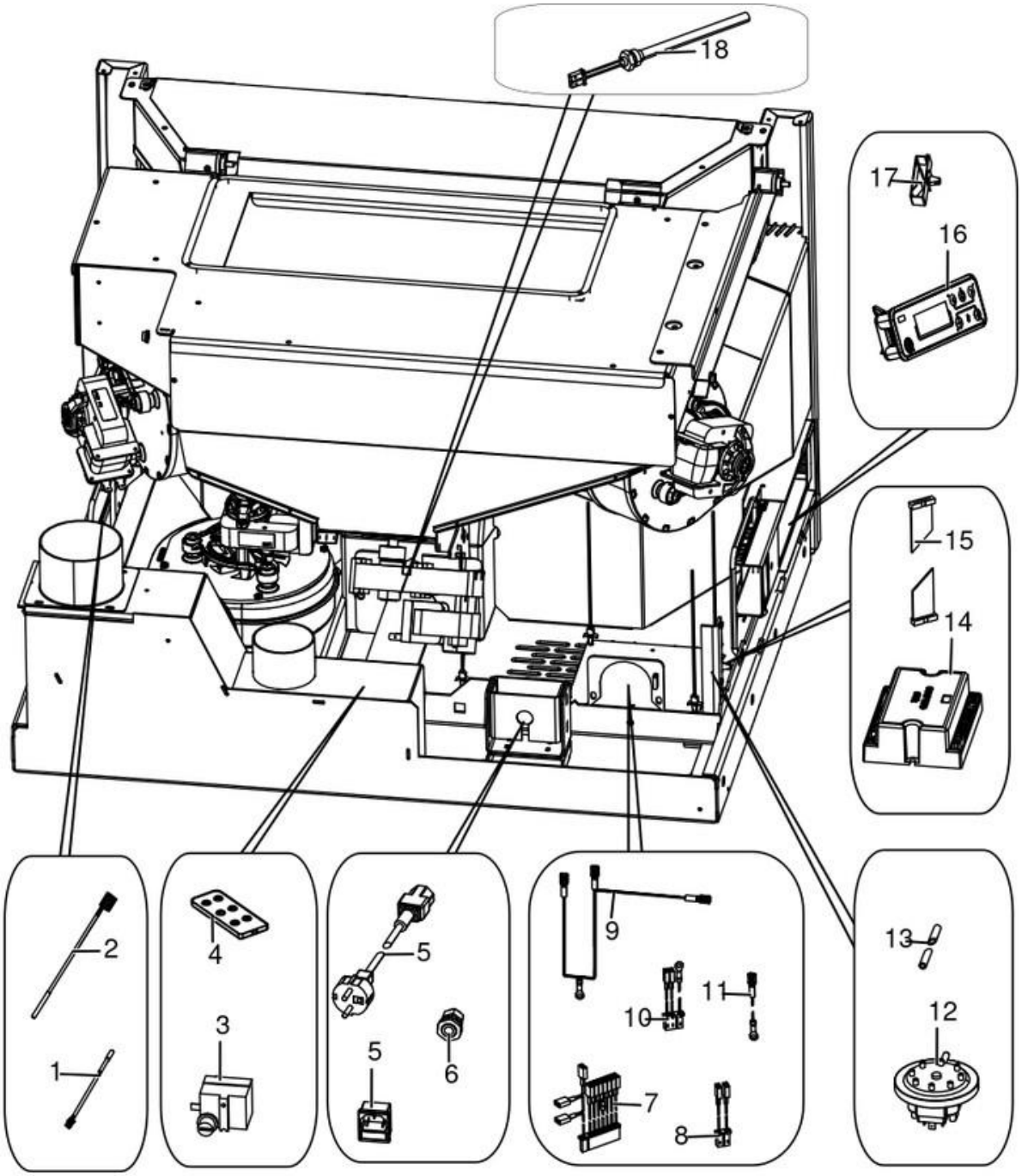

All rights reserved MCZ GROUP S.p.A.

N°	Codice/Code	Descrizioni / Description / Beschreibung / Description / Descripcion
1	4D145150100	Sonda ambiente / Room temperature sensor / Raumtemperaturfühler / Sonde température ambiance / Sonda ambiente
2	4D145150060	Sonda fumi / Smoke sensor / Rauchsonde / Sonde fumées / Sonda humos
3	4D14513051	Termostato / Thermostat / Thermostat / Thermostat / Termostato
4	4D14513055	Telecomando / Remote control / Fernbedienung / Télécommande / Mando a distancia
6	4D14513018	Pressacavo + cont. Dado / Cable holder / Kabelklemme / Presse-cable / Presionacable
7	4D145183010	Cablaggio 8 Pin completo / Complete wiring kit 8 Pin / Komplette Verkabelung 8 Pin / Câblage complet 8 Pin / Cableado completo 8 Pin
8	4D145183020	Cablaggio ventilatore 2 Pin / 2 Pin fan cable / 2 Pin Ventilatorkabelung / Câblage 2 Pin pour ventilateur / Cableado 2 Pin del ventilador
9	4D145183030	Cavo massa 1450 mm / Mass cable 1450 mm / Masse Kabel 1450 mm / Cable masse 1450 mm / Cable masa 1450 mm
10	4D145183040	Cablaggio 3 Pin completo / Complete wiring kit 3 Pin / Komplette Verkabelung 3 Pin / Câblage complet 3 Pin / Cableado completo 3 Pin
11	4D14513060	Cavo massa 130 mm / Mass cable 130 mm / Masse Kabel 130 mm / Cable masse 130 mm / Cable masa 130 mm
12	4160482	Pressostato 0,4 mbar / Pressure gauge 0,4 mbar / Druckwächter 0,4 mbar / Pressostat 0,4 mbar / Presostato 0,4 mbar
13	4D18013005	Tubicino siliconico - 5m / Silicon tube - 5m / Silikonrohr - 5m / Petit tuyau en silicone - 5m / Tubo silicónico - 5m
14	4D145185010B	Scheda madre / Motherboard / Hauptplatine / Carte mère / Tarjeta madre
15	4D145158020	Cavo flat scheda-pannello / Flat cable motherboard-control panel / Flat Kabel Hauptplatine-Bedienblende / Câble flat carte mére-panneau commande / Cable flat tarjeta madre-panel de mandos
16	4D1451303300	Pannello comandi grafico / Graphic control panel / Graphische Bedienblende / Tableau de commande / Panel de mandos gráfico
17	4D14513008	Fermacavi piatto / Flat cable stop / Flache Kabelklemmen / Serre-câbles plats / Clips de cable plano
18	4D145181040	Candeletta / Sparkplug / Zündkerze / Bougie / Bujía

All rights reserved MCZ GROUP S.p.A.

ZEFIRO3

Gruppo elettrico ed elettronico dal SN 2006226050001 incluso / Electrical and electronic group from SN 2006226050001 included / Elektrische und elektronische Gruppe ab SN 2006226050001 eingeschlossen / Group électrique et électronique à partir du NS 2006226050001 inclue / Grupo eléctrico y electrónico a partir de NS 2006226050001 incluido

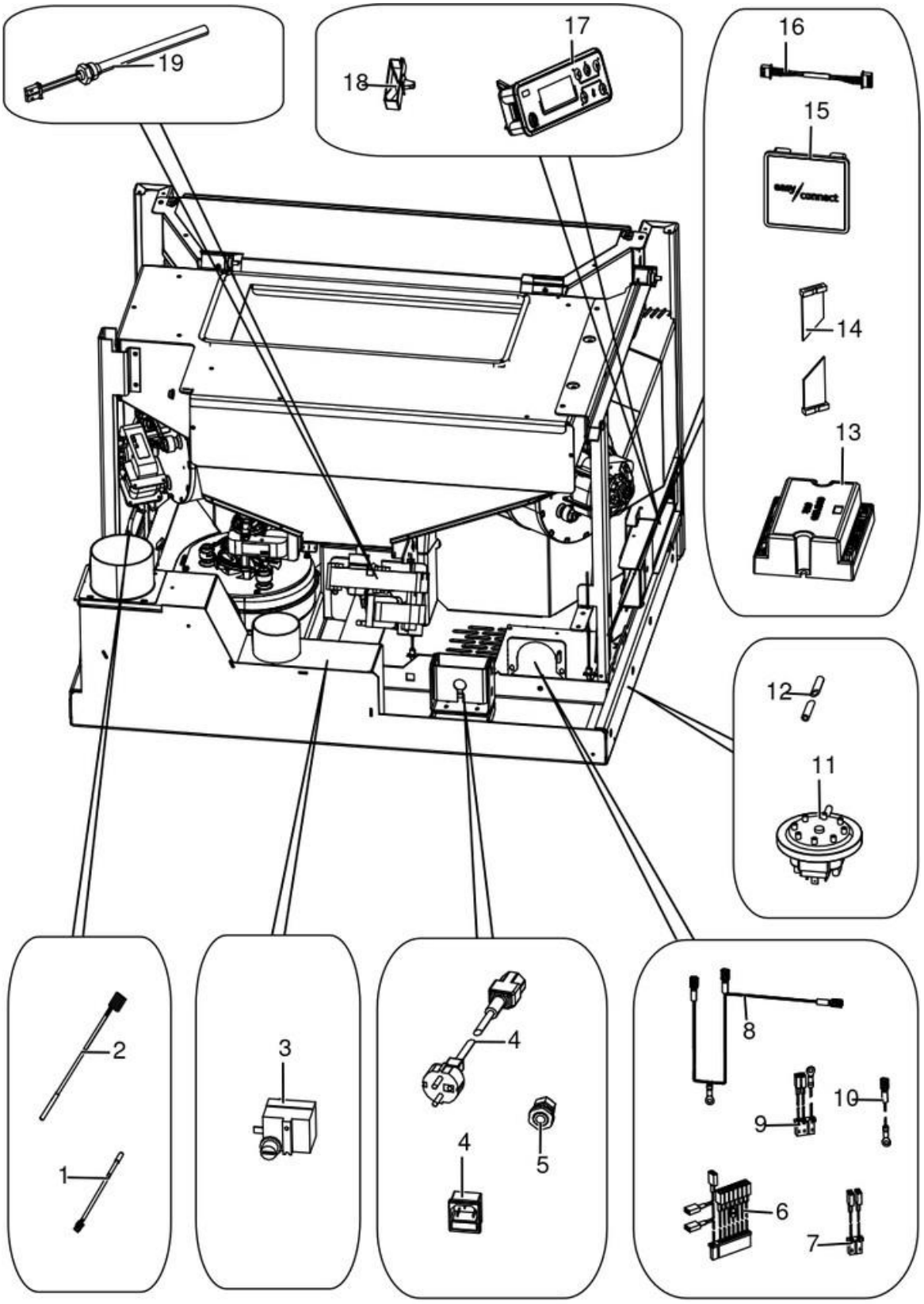

All rights reserved MCZ GROUP S.p.A.

N°	Codice/Code	Descrizioni / Description / Beschreibung / Description / Descripcion
1	4D145150100	Sonda ambiente / Room temperature sensor / Raumtemperaturfühler / Sonde température ambiance / Sonda ambiente
2	4D145150060	Sonda fumi / Smoke sensor / Rauchsonde / Sonde fumées / Sonda humos
3	4D14513051	Termostato / Thermostat / Thermostat / Thermostat / Termostato
4	4D14513084	Cavo con spina Shucko / Cable with Shucko plug / Kabel mit Schucko Steckdose / Cable avec fiche Shucko / Cable con enchufe Schucko
5	4D14513018	Pressacavo + cont. Dado / Cable holder / Kabelklemme / Presse-cable / Presionacable
6	4D145183010	Cablaggio 8 Pin completo / Complete wiring kit 8 Pin / Komplette Verkabelung 8 Pin / Câblage complet 8 Pin / Cableado completo 8 Pin
7	4D145183020	Cablaggio ventilatore 2 Pin / 2 Pin fan cable / 2 Pin Ventilatorkabelung / Câblage 2 Pin pour ventilateur / Cableado 2 Pin del ventilador
8	4D145183030	Cavo massa 1450 mm / Mass cable 1450 mm / Masse Kabel 1450 mm / Cable masse 1450 mm / Cable masa 1450 mm
9	4D145183040	Cablaggio 3 Pin completo / Complete wiring kit 3 Pin / Komplette Verkabelung 3 Pin / Câblage complet 3 Pin / Cableado completo 3 Pin
10	4D14513060	Cavo massa 130 mm / Mass cable 130 mm / Masse Kabel 130 mm / Cable masse 130 mm / Cable masa 130 mm
11	4160482	Pressostato 0,4 mbar / Pressure gauge 0,4 mbar / Druckwächter 0,4 mbar / Pressostat 0,4 mbar / Presostato 0,4 mbar
12	4D18013005	Tubicino siliconico - 5m / Silicon tube - 5m / Silikonrohr - 5m / Petit tuyau en silicone - 5m / Tubo silicónico - 5m
13	4D1452002400B	Scheda madre / Motherboard / Hauptplatine / Carte mère / Tarjeta madre
14	4D145158020	Cavo flat scheda-pannello / Flat cable motherboard-control panel / Flat Kabel Hauptplatine-Bedienblende / Câble flat carte mére-panneau commande / Cable flat tarjeta madre-panel de mandos
15	4D145201030	Modulo Wi-fi / Wi-fi module / Wi-Fi-Modul / Module Wi-fi / Módulo wifi
16	4D1452002500	Cavo flat 7 vie / Flat cable / Flat-Kabel / Cable flat / Cables flat
17	4D1451303300	Pannello comandi grafico / Graphic control panel / Graphische Bedienblende / Tableau de commande / Panel de mandos gráfico
18	4D14513008	Fermacavi piatto / Flat cable stop / Flache Kabelklemmen / Serre-câbles plats / Clips de cable plano
19	4D145181040	Candeletta / Sparkplug / Zündkerze / Bougie / Bujía

All rights reserved MCZ GROUP S.p.A.

ZEFIRO3

Gruppo aria comburente / Combustion air group / Verbrennungsluft Gruppe / Groupe air comburant / Grupo aire comburente

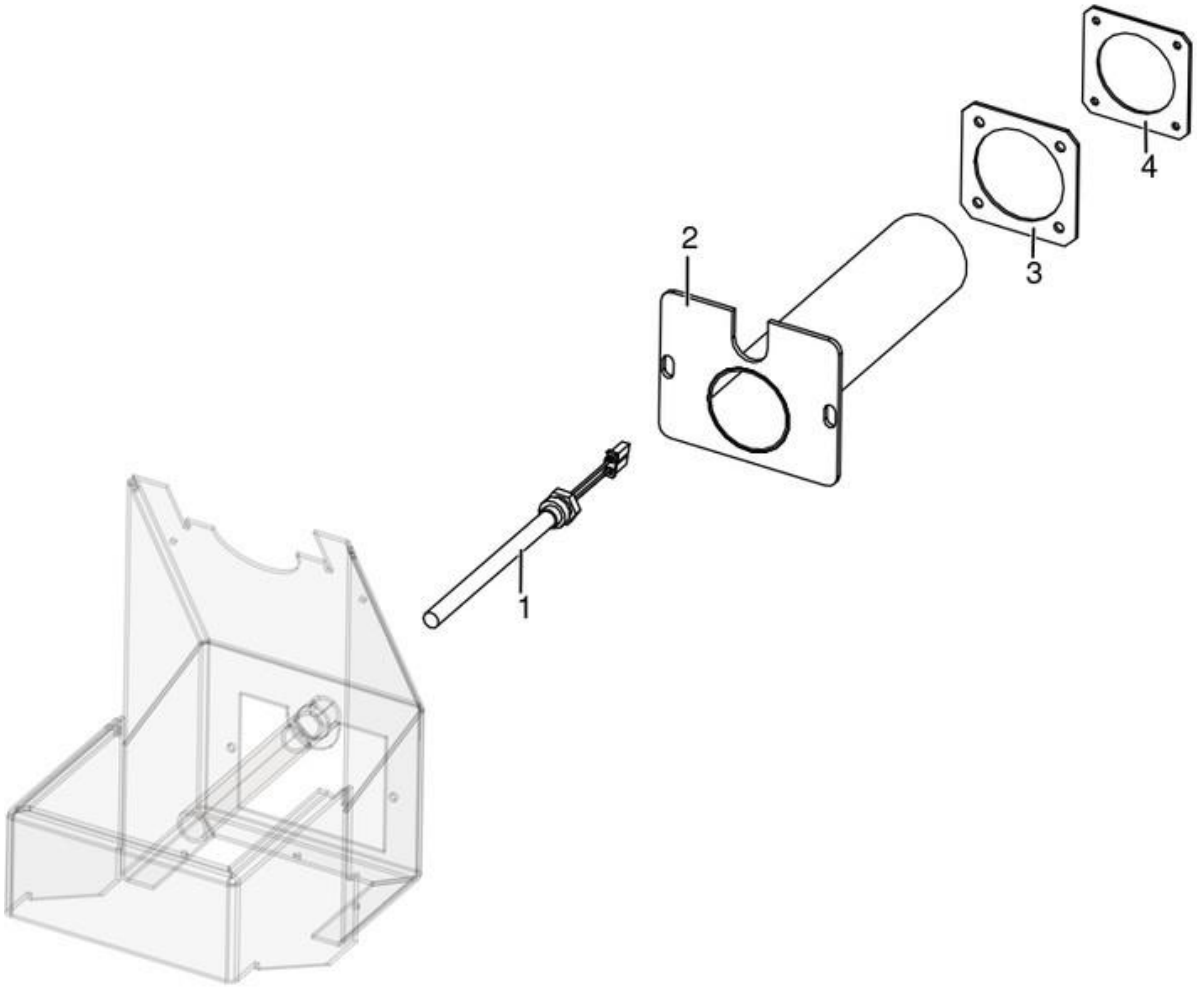

All rights reserved MCZ GROUP S.p.A.

N°	Codice/Code	Descrizioni / Description / Beschreibung / Description / Descripcion
1	4D145181040	Candeletta / Sparkplug / Zündkerze / Bougie / Bujía
2	4D160183030	Insieme ingresso tubo aria / Air inlet pipe group / Lufteintritt- Rohrgruppe / Groupe conduit entrée d'air / Conjunto de entrada de tubo de aire
3	4D241183701	Staffa / Bracket / Bügel / Etrier / Abrazadera
4	41801200300	Guarnizione collettore aria / Air manifold gasket / Luftkollektor Dichtung / Joint collecteur air / Burlete del colector aire

All rights reserved MCZ GROUP S.p.A.

ZEFIRO3

Gruppo fumi / Smoke group / Rauchgruppe / Groupe fumées / Grupo de humos

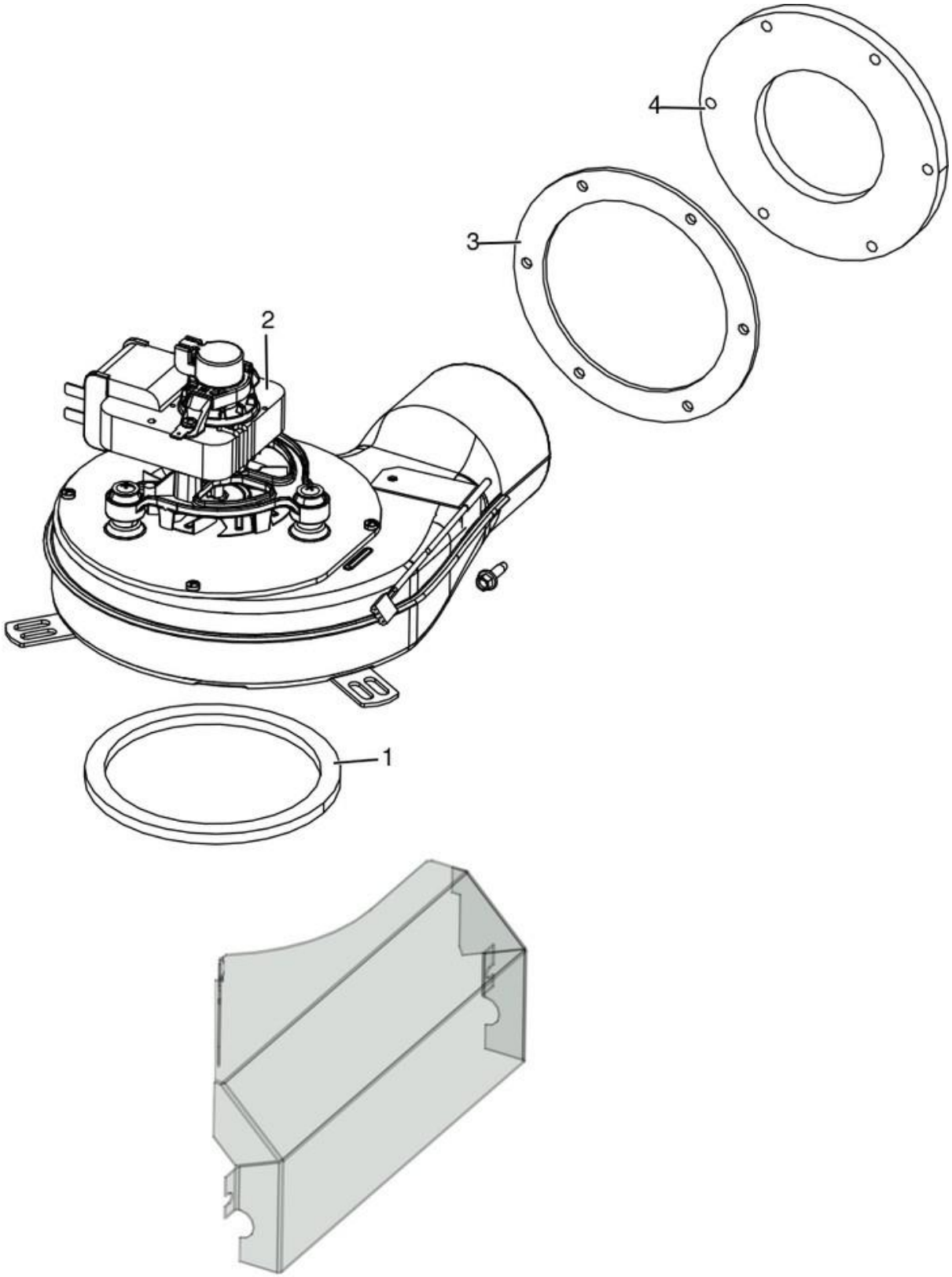

All rights reserved MCZ GROUP S.p.A.

N°	Codice/Code	Descrizioni / Description / Beschreibung / Description / Descripcion
1	4D18013024	Guarnizione / Gasket / Dichtung / Joint / Junta
2	4D145140150	Ventilatore fumi stagno / Tin smoke fan / Hermetisch Dichtrauchgebläse / Ventilateur fumées étanche / Ventilador humos hermético
2	41451209300	Encoder per ventilatore fumi marchi LN2/SIT / Encoder for LN2/SIT smoke fan / Encoder für LN2/SIT Rauchgasgebläse / Encoder pour ventilateur des fumées marques LN2/SIT / Encoder para ventilador humos marcas LN2/SIT
3	4D24018310516	Flangia Ø 142 / Flange Ø 142 / Flansch Ø 142 / Bride Ø 142 / Brida Ø 142
4	4D18013049	Guarnizione D.140 mm / Gasket D.140 mm / Dichtung D.140 mm / Joint D.140 mm / Junta D.140 mm

All rights reserved MCZ GROUP S.p.A.

ZEFIRO3

Gruppo ventilazione / Ventilation group / Lüftungsgruppe / Groupe de ventilation / Grupo de ventilación

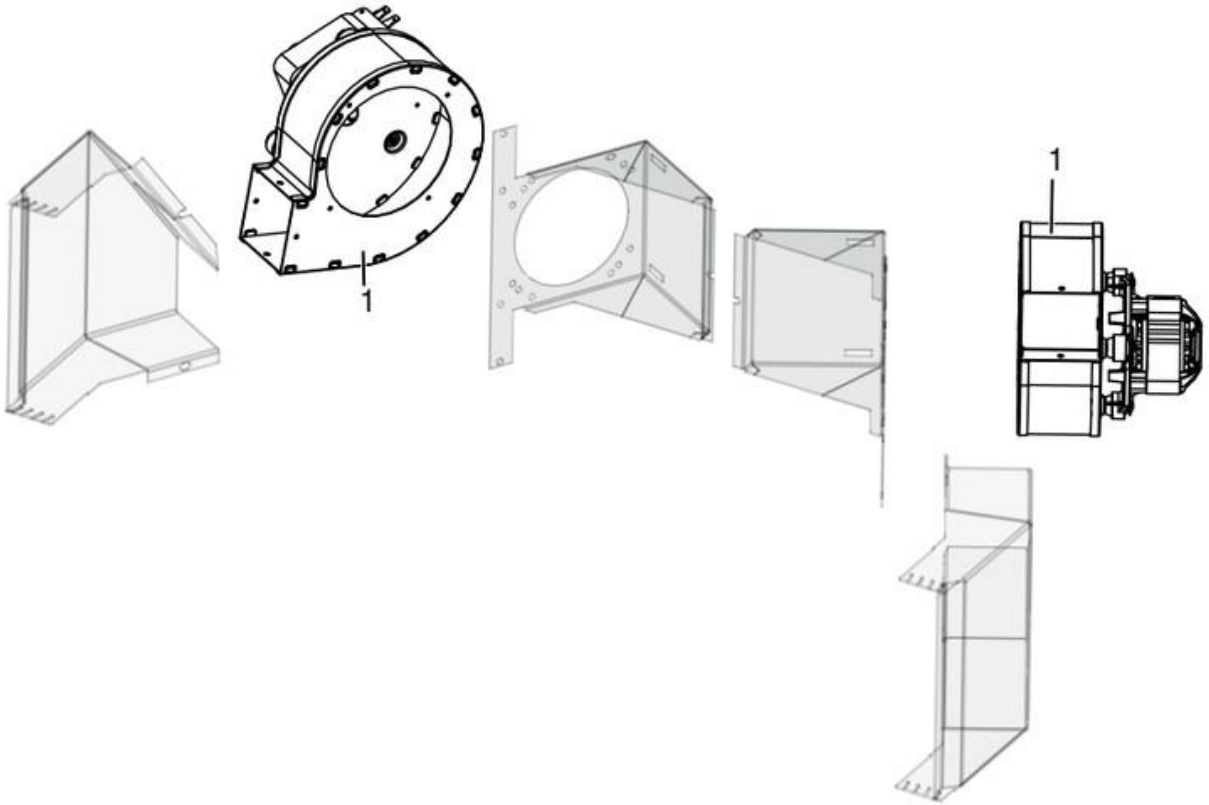

All rights reserved MCZ GROUP S.p.A.

N°	Codice/Code	Descrizioni / Description / Beschreibung / Description / Descripcion
1	4D145201070	Ventilatore aria / Air fan / Luftgebläse / Ventilateur air / Ventilador aire

All rights reserved MCZ GROUP S.p.A.

ZEFIRO3

5018001 cassetto pellet / 5018001 cassetto pellet / 5018001 cassetto pellet / 5018001 cassetto pellet / 5018001 cassetto pellet

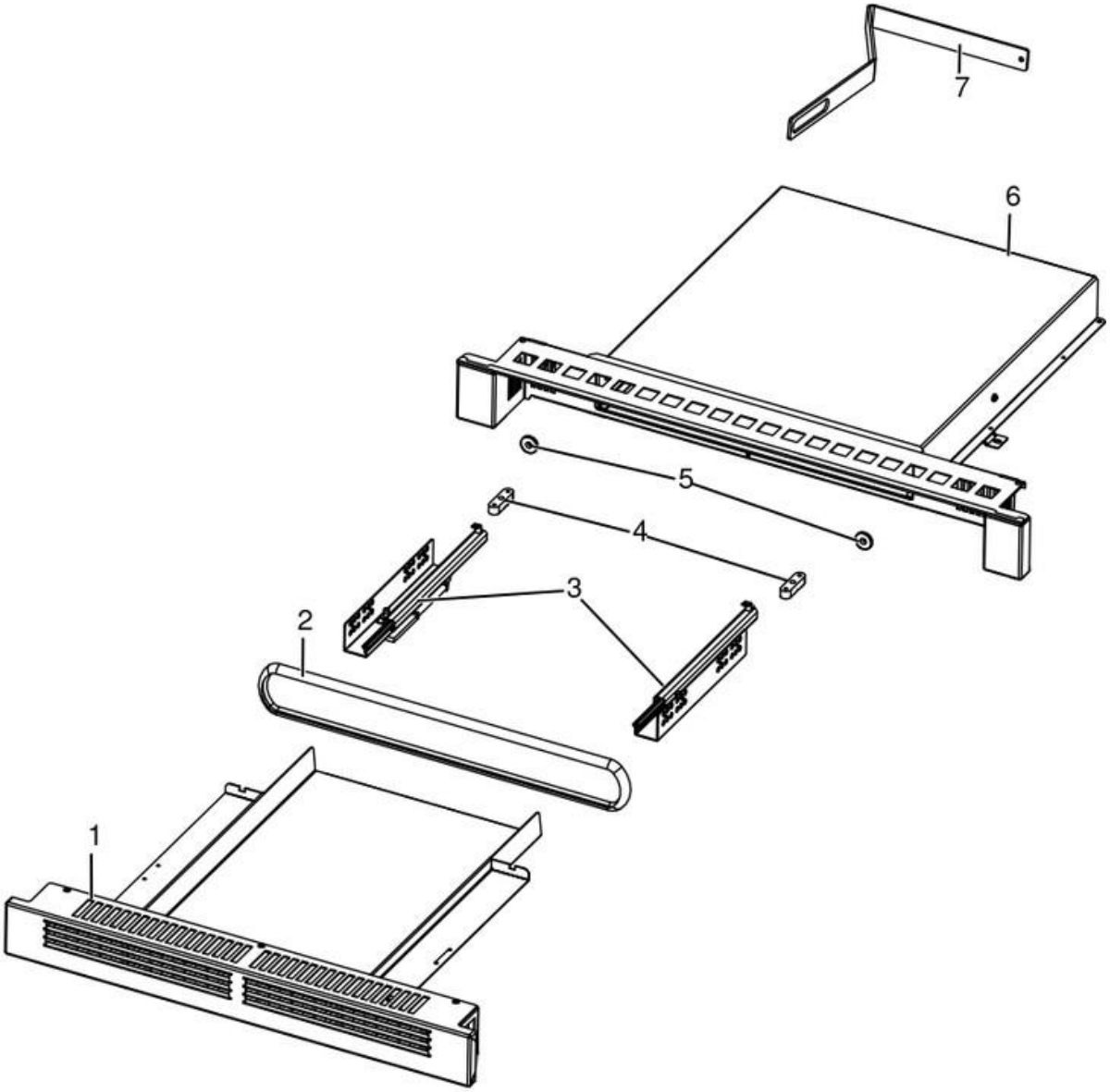

All rights reserved MCZ GROUP S.p.A.

N°	Codice/Code	Descrizioni / Description / Beschreibung / Description / Descripcion
1	4D24018351463	Frontale cassetto / Drawer front / Kasten Vorne / Frontal du Tiroir / Frontal de Cajón
2	4D180184070	Guarnizione cassetto caricamento / Loading drawer gasket / Dichtung Kasten für Pelleteinfüllung / Join du tiroir de chargement du pellet / Junta del cajón de carga pellet
3	4D180184030	Guida / Guide / Schiene / Glissière / Corredera
4	4D180184040	Fissaggio guida anteriore / Front guide clip / Befestigung Schgiene Vorne / Fixation glissière entérieure / Fijación Carredera anterior
5	4D120165020	Magnete 20x3 (pz.10) / 20x3 magnet (pcs.10) / 20x3 Magnet (Stk 10) / Aimant 20x3 (Pcs 10) / Imán 20x3 (Pz.10)
6	4D24018353463	Cassetto caricamento pellet / Pellet loading drawer / Kasten für Pelleteinfüllung / Tiroir de chargement du pellet / Cajón de carga pellet
7	4D24018310436	Spatola pellet / Pellet spatula / Drehende Spachtel / Spatule tournat / Espátula voltante

All rights reserved MCZ GROUP S.p.A.

ZEFIRO3

5018002 botola pellet / 5018002 botola pellet / 5018002 botola pellet / 5018002 botola pellet / 5018002 botola pellet

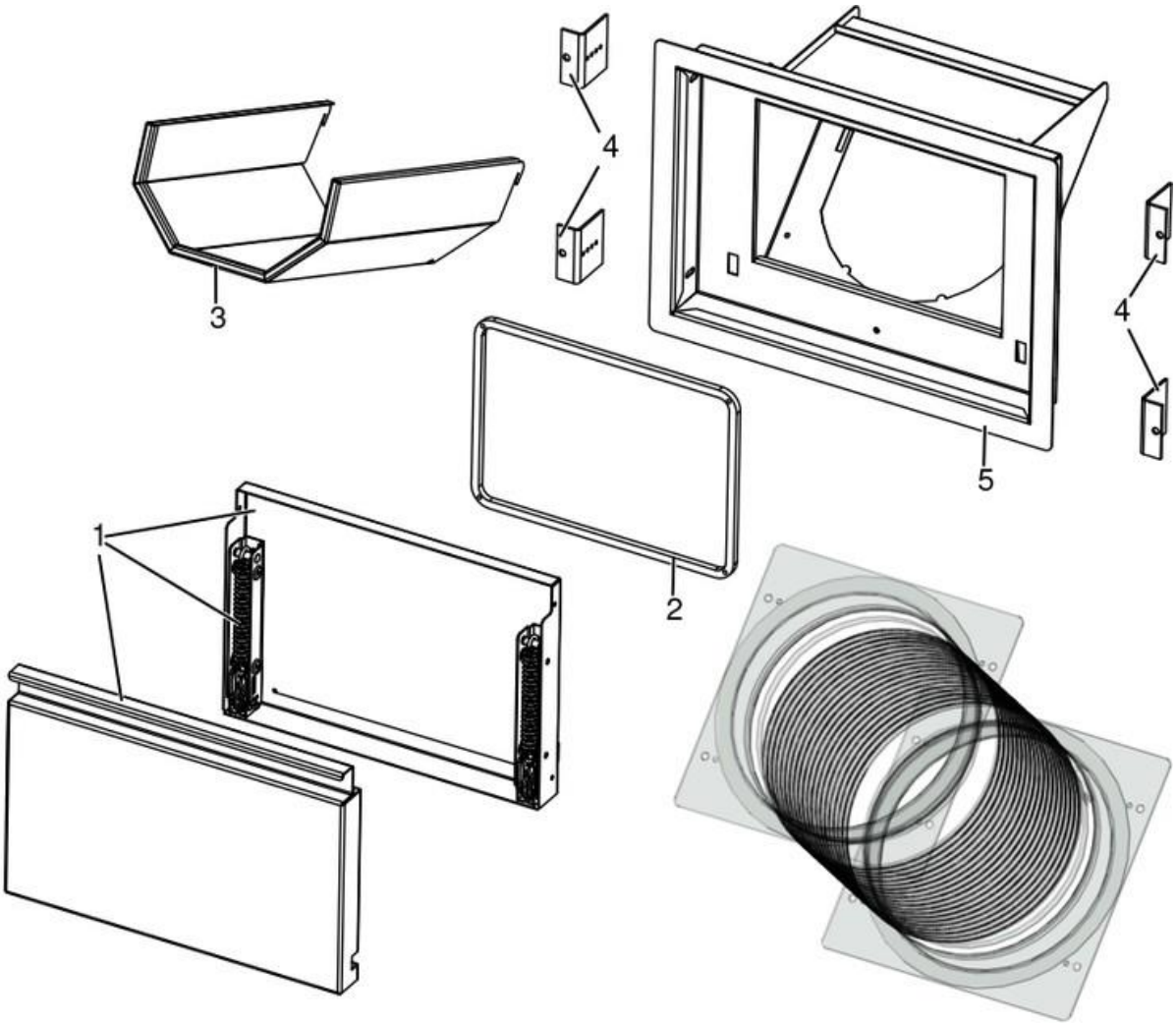

All rights reserved MCZ GROUP S.p.A.

N°	Codice/Code	Descrizioni / Description / Beschreibung / Description / Descripcion
1	4D2401835836	Sportello caricamento pellet / Pellet loading hatch / Klappe Pelleteinfüllung / Trappe de chargement pellet / Puerta carga pellet
2	4D18013022	Guarnizione 230X160 mm / Gasket 230X160 mm / Dichtung 230x160 mm / Joint 230X160 mm / Junta 230X160 mm
3	4D241183073	Scivolo di caricamento pellet / Pellet loading chute / Pellets-Einfüllrutsche / Goulotte de chargement de pellets / Rampa de carga pellet
4	4D241183541	Staffa / Bracket / Bügel / Etrier / Abrazadera
5	4D24018366463	Imbuto pellet / Loading funnel / Pellet Förderelement / Entonnoir de chargement / Embudo de carga

All rights reserved MCZ GROUP S.p.A.

ZEFIRO3

5018005 kit canalizzazione / 5018005 kit canalizzazione / 5018005 kit canalizzazione / 5018005 kit canalizzazione / 5018005 kit canalizzazione

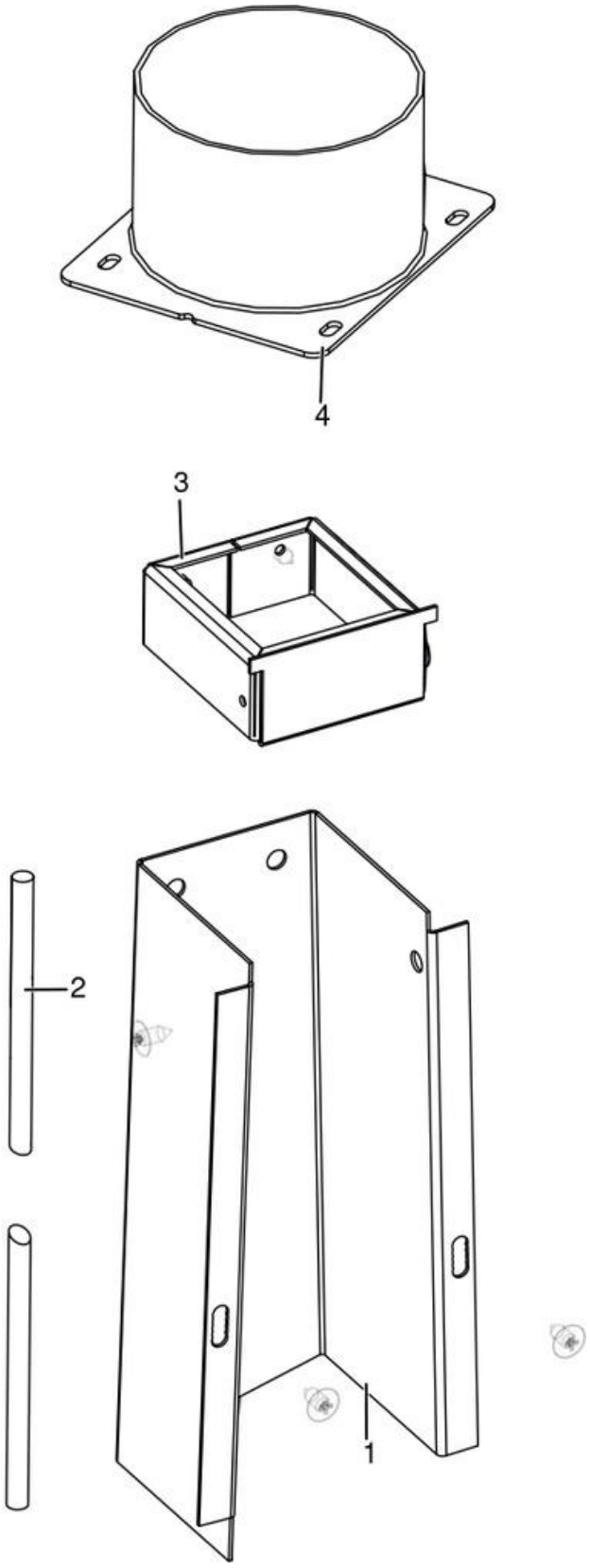

All rights reserved MCZ GROUP S.p.A.

N°	Codice/Code	Descrizioni / Description / Beschreibung / Description / Descripcion
1	4D241183103	Carter aria canalizzazione / Air canalization casing / Luftkanalisierung- Gehäuse / Carter canalisation air / Cárter aire
2	4D18013034A	Guarnizione Tricotex D.6mm (5m) / Gasket Tricotex D.6mm (5m) / Dichtung Tricotex D.6mm (5m) / Joint Tricotex D.6mm (5m) / Junta Tricotex D.6mm (5m)
2	4D18013034B	Guarnizione Tricotex D.6mm (50m) / Gasket Tricotex D.6mm (50m) / Dichtung Tricotex D.6mm (50m) / Joint Tricotex D.6mm (50m) / Junta Tricotex D.6mm (50m)
3	4D241183113	Staffa aria canalizzazione / Air canalization bracket / Luftkanalisierung- Bügel / Etrier canalisation air / Abrazadera de aire
4	4D14513040	Raccordo D.80 mm / Connector D.80 mm / Anschlußrohr D.80 mm / Raccord D.80 mm / Racor D.80 mm

All rights reserved MCZ GROUP S.p.A.